DIMENSIONS
401-003+CW150

440/450 SERIES

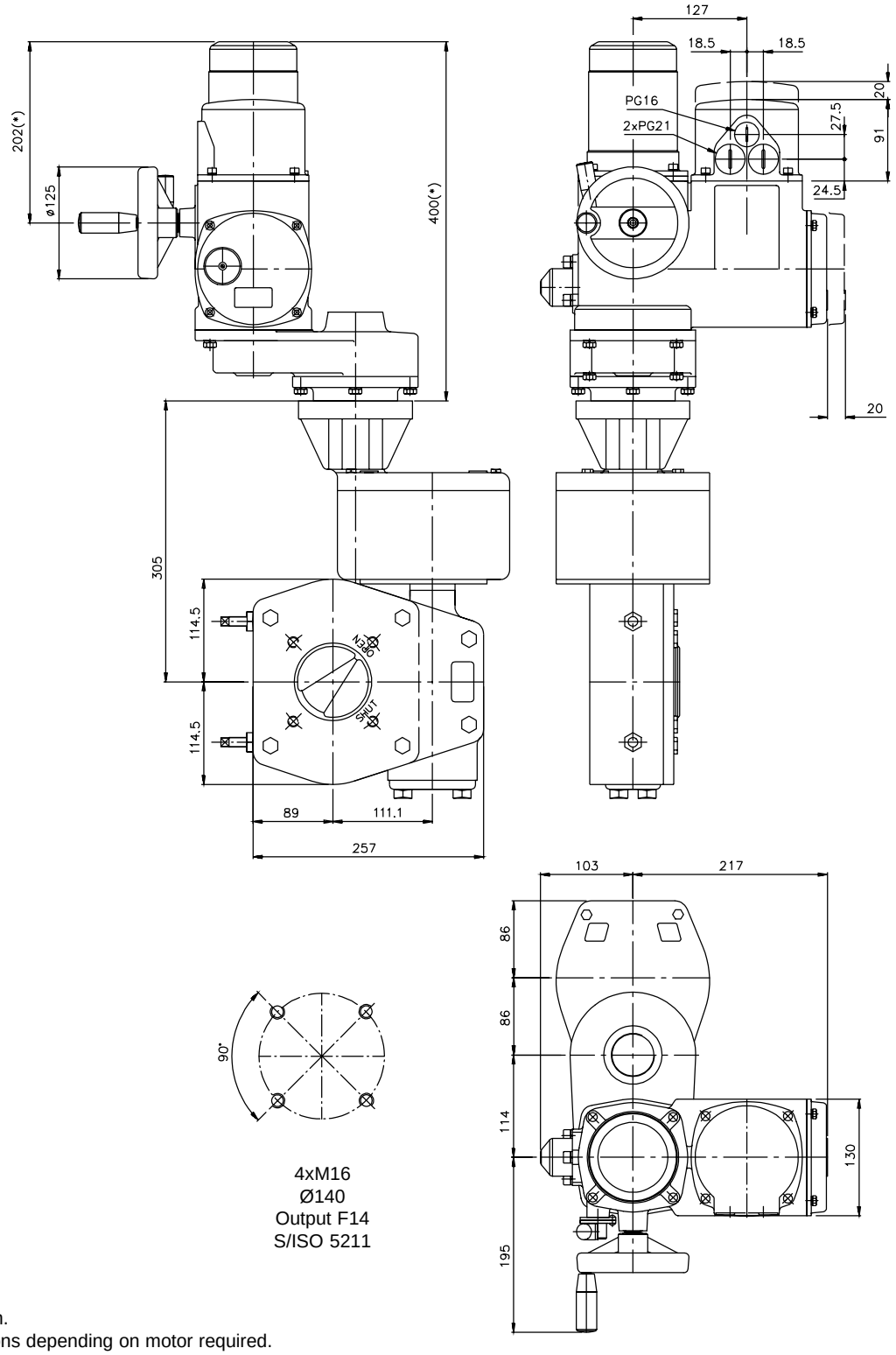

Dimensions in mm.
(*) Exact dimensions depending on motor required.

Approximate weight : 69,6 Kg.

Subject to change without notice. Previous data sheets invalid with the issue of the latest data sheets.

VALVE CONTROL

centork

Nº : **E1440X027**

Issued: **09.99**

CENTRALAIR, S.A. All rigths reserved.